HEXAGON
MANUFACTURING INTELLIGENCE

PRODUCT BROCHURE

m&h 3D FORM INSPECT SOFTWARE

MEASURING AND REPORTING ON THE MACHINE TOOL

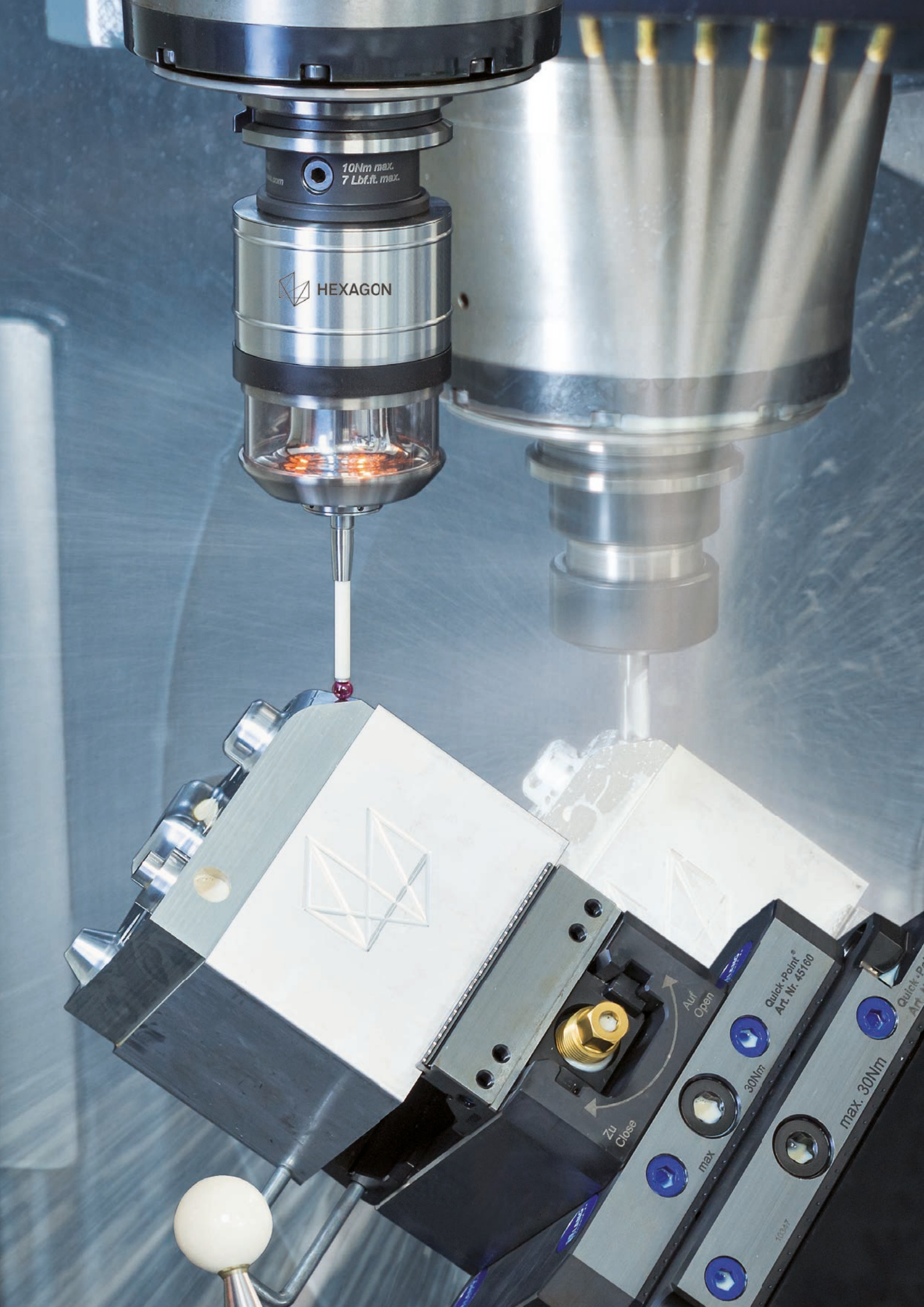
10Nm max.
7 Lbf.ft. max.
HEXAGON
Auf
Open
Zu
Close
Quick-Point®
Art. Nr. 45160
30Nm
max
max. 30Nm

THE ORIGINAL – SINCE 2002 A LEADER IN THE MARKET

As a technological leader in the on-machine probing and tool checking markets, m&h Inprocess Messtechnik GmbH understands the importance of software in delivering high-productivity solutions for in-process measurement. Only through applying cost-effective, easy to use, capable software, the demands of today's manufacturing processes can be met.

WHY DO WE NEED QUALITY CONTROL ON THE MACHINE TOOL?

Causes of errors on the workpiece

MACHINE ERRORS – KINEMATIC DEVIATION

- Contouring and axis error
- Path accuracy error
- Change over time due to foundation drifts, wear, material ageing and collisions

TOOL ERRORS PRIOR TO PROCESSING

- Error tolerance on the tool
- Concentric run-out tolerance
- Contouring accuracy
- Clamping error in tool holder

TOOL ERRORS DURING PROCESSING

- Wear
- Tip edge break or complete break
- Linear expansion
- Tool change error (dirt on sphere)

APPLICATION ERRORS – THE HUMAN FACTOR

- User's lack of programming knowledge
- Incorrect selection of processing strategy
- Feed calculation
- Incorrect selection of tool/material/coolant

SIMPLE AND RELIABLE MEASURING AND REPORTING DIRECTLY IN THE CLAMP

This software enables quick, easy measuring and logging of important geometries and shapes on all sides and with all axes directly on the machine tool.
This saves time, provides safety and enhances quality.

- Intuitive handling and creation of complex measuring tasks without prior programming knowledge required
- Reliable measuring results thanks to RTC – Real Time Calibration
- Easy, safe control of free-form surfaces and ruled geometries on 3 to 5-axis machines
- Smooth post-processing of critical surfaces using Best Fit adjustment on completed workpieces
- Optimal measurement plotting on complex forged parts or cast workpieces using Best Fit adjustment

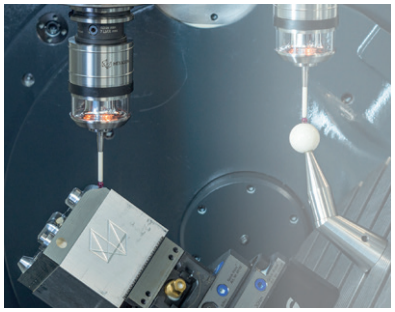

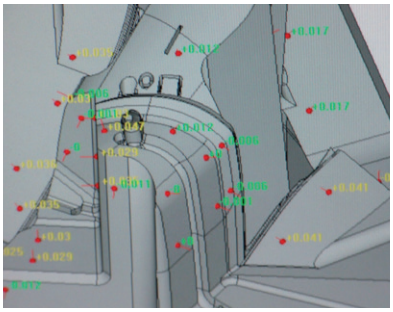
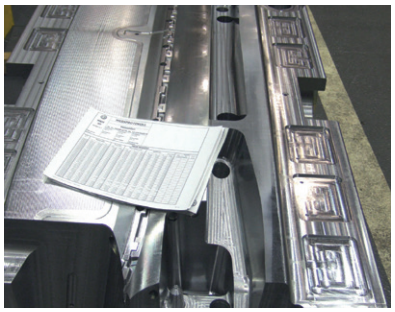

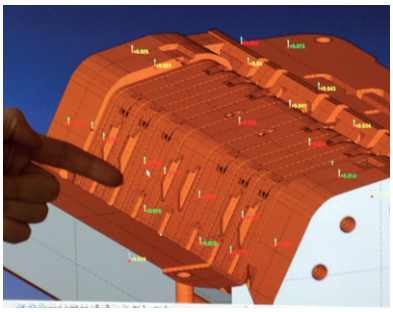

FUNCTIONS, OPTIONS AND ENHANCEMENTS

STANDARD FUNCTIONS

- Check free-form surfaces
- Check ruled geometries such as spheres, drill holes, cylinders, etc.
- Determine angled positions for surfaces and ruled geometries
- Analyse shape and position tolerances
- Cross probes are supported

COMPLETE SUPPORT OF 4TH AND 5TH AXIS (OPTION)

- Measuring on all sides of the workpiece and at undercuts or inclined geometries in free space
- Collection of kinematic errors of the 4th and 5th axes through calibration or actual workpiece
- Detected deviations are compensated during the measuring process

BEST-FIT FUNCTION (OPTIONAL)

- Optimization of deviations in position and location by turning and shifting the workpiece
- Can be used for quick fitting of the blank into the best machining position
- Quick re-clamping of moulds for necessary rework, determination of position and zero point defining after measuring

3DFI JOBMASTER (SOFTWARE MODULE)

- Supports and manages different measuring and best-fit programs as well as reporting during automated operation
- Improves and supports unmanned tool and mould making
- Automatic measurements – Best-fit – Reporting with 3DFI JobMaster

LOGGING AND DOCUMENTATION

- Clear, understandable measuring reports
- Can be shown in Excel, Word, OpenOffice, PDF or HTML as well as in the CAD view.
- For the complete workpiece or for partial measurements

IT DOESN'T GET ANY SIMPLER THAN THIS

HOW DO I GET THE DESIRED RESULT?

3D Form Inspect supports a wide range of CAD formats and machine post-processors.

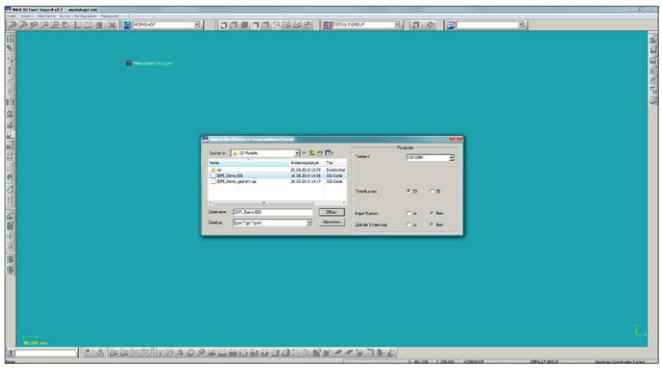

> Import workpiece data

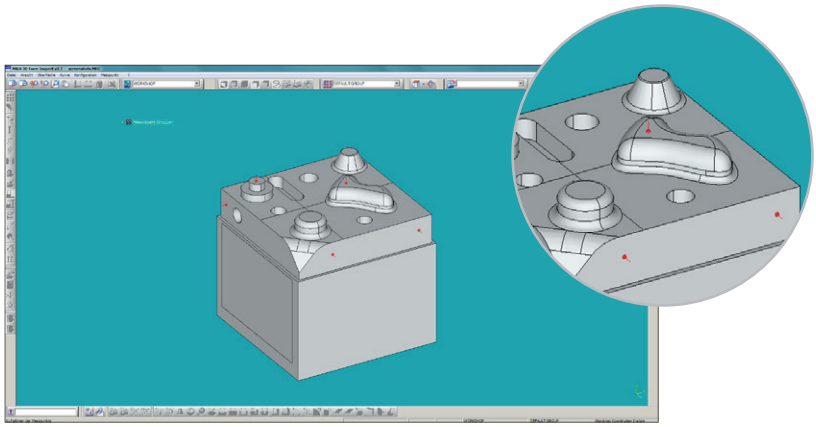

> Define measuring points with click of a mouse or load a saved measuring programme

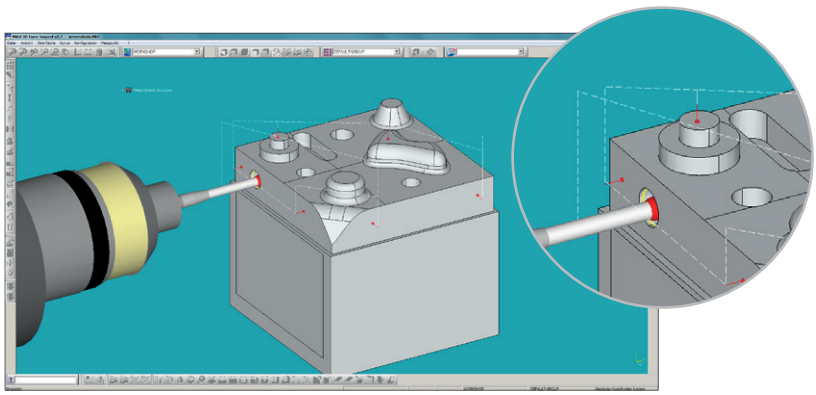

> Run collision control and simulation of the measuring programme on screen, plus data transfer to the CNC controls

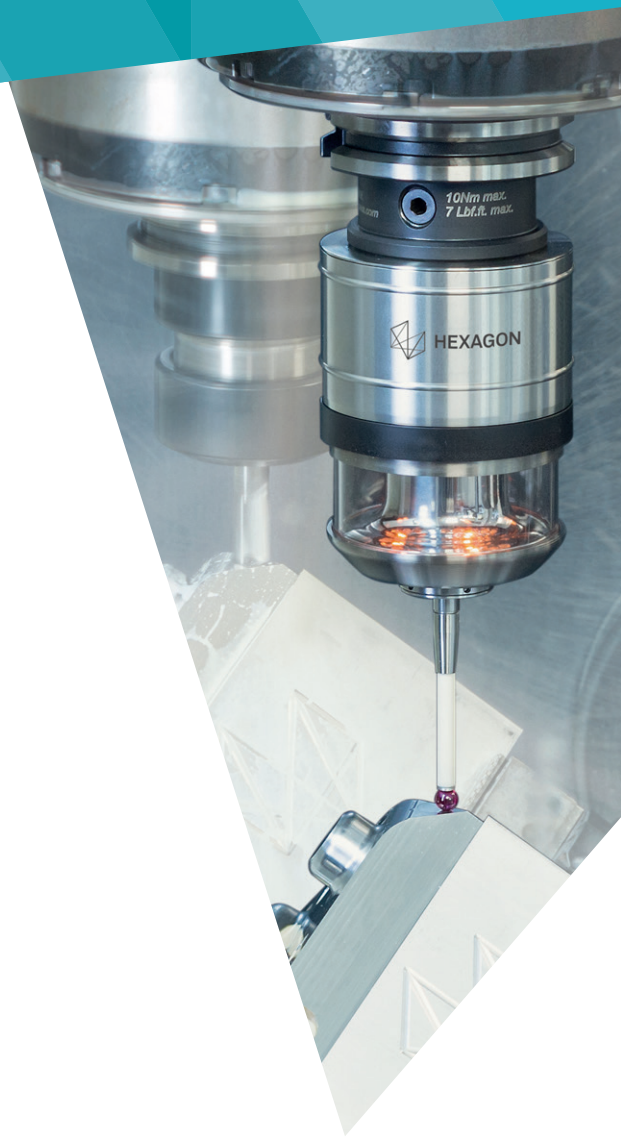

Carry out fully automatic calibration and measurement on the machine >>>

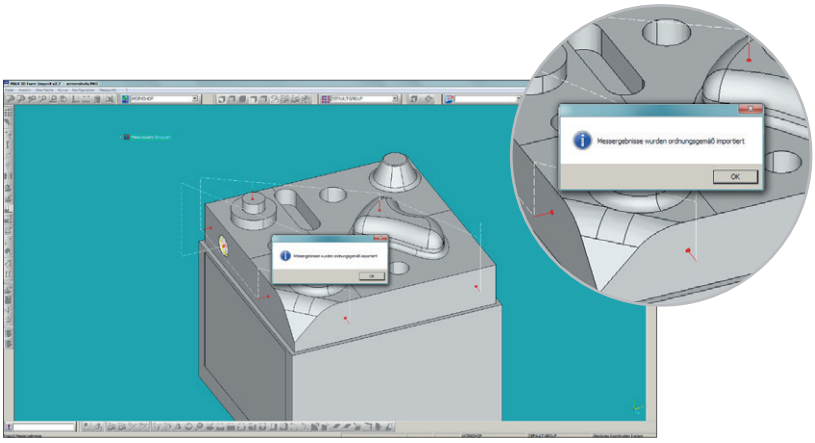

> Import measuring results

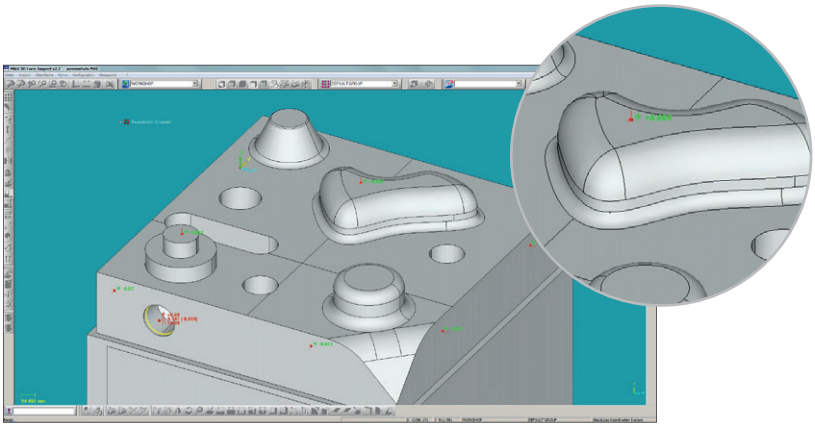

> Analyse measuring results; immediate reworking is possible without wasting time

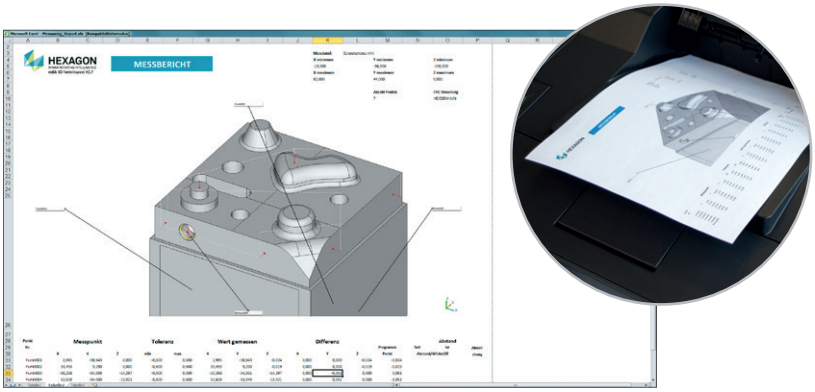

> Create a measuring log and documentation of the quality achieved

CALIBRATION STRATEGY FOR HIGHEST PRECISION

m&h 3D Form Inspect offers the option of adapting the calibration strategy to its requirements, depending on the production or positioning precision of the machine and the required workpiece tolerance.

WORKPIECE-RELATED

The points and probing vectors are calibrated which were set as measuring points on the 3D model. The vectors for measurements by axis movements are also applied at this time. The workpiece is then measured.

- The „Workpiece-related“ calibration strategy is used for series production or palletising systems.

ONE-TIME

Here, 161 calibration probings are recorded „one time“ on the calibration ball. These probings are recorded on 3 axes.

- The “One-time” calibration strategy is used only rarely. For example, it is used for parts that have a relatively large tolerance.

PATENTED CALIBRATION STRATEGY FOR BEST RESULTS

HIGHEST PRECISION – PATENTED

The patented calibration strategy "Highest precision" is the most important feature and is recommended by m&h. After each axis movement, the probing vectors are calibrated on the calibration sphere. This process is patented by m&h. Exactly those points and probing vectors are calibrated which were set as measuring points on the 3D model. Measuring points with the same probing vectors are only calibrated and then calculated for the vector, which saves time.

- For highly precise parts for which any sources of error should be eliminated as far as possible.

WHICH UNCERTAINTIES AND ERRORS ARE ELIMINATED BY THE RTC – REAL TIME CALIBRATION ?

- Compensate measuring errors occurring at the spindle interface (SK/BAT)
- Automatically detect and compensate kinematic changes while measuring
- Identify thermal displacements in the working area and apply to evaluations
- Remove the effects of Axis Lag-errors from measuring procedures
- Eliminate pre-travel variation of probing systems using vector calibration

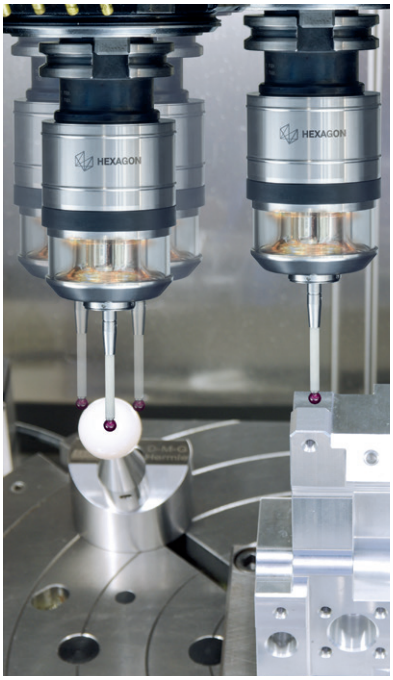

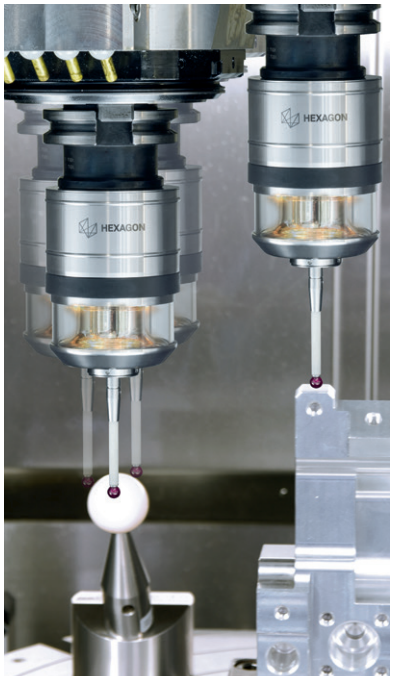

3D FORM INSPECT SOFTWARE

This saves time, gives safety, and enhances quality – for many years leading companies from the following fields have been relying on it:

- Aerospace
- Automotive
- Mould & Die
- Mechanical Engineering
- Power Generation
- Precision Industry
- Medical Technology
- Domestic Appliances

3D Form Inspect has become accepted on the market and has proven its worth, both for large-sized global players and small-sized companies. Please see excerpts from some customer case studies.

"This simply gives us the certainty in production we need. And it pays in short time, definitely."

Markus Graber | RUAG Aerospace, Hardheim

"This software pays within shortest time."

Jürg Huber | Geberit, Jona

"Today, measuring on the machine is absolutely normal and is of prime importance."

Günter Hofmann | Hofmann, Lichtenfels

"Die spotting was reduced by 70 – 80%."

Dipl.-Ing. Marc Alexander Popov | Vorwerk, Wuppertal

"Measuring with 3D Form Inspect brought a step forward for the mould makers."

Oliver Schütze und Dirk Strümpf | Volkswagen, Braunschweig

m&h
PROBING SYSTEMS AND SOFTWARE

m&h designs and manufactures precision made, highquality, dependable probe systems for use in machine tools. Technical innovation focused on our customer's manufacturing processes lies at the heart of our development process. As a part of Hexagon Manufacturing Intelligence, m&h stands for innovative metrology for machine tools.

- PROBING SYSTEMS
- TEMPERATURE PROBING SYSTEMS
- LASER TOOL SETTERS
- TOOL SETTERS
- MEASURING SOFTWARE

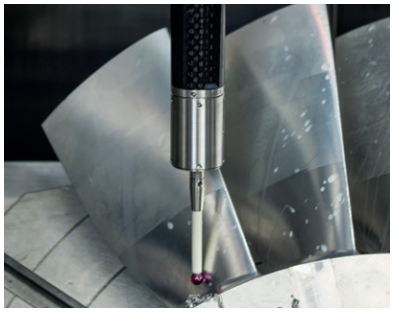

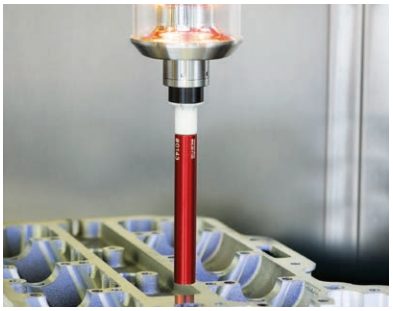

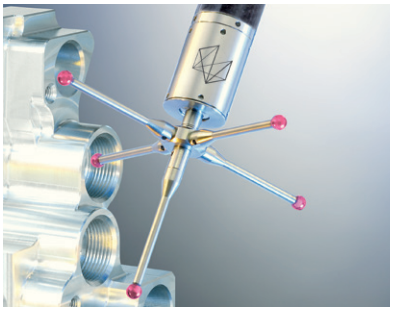

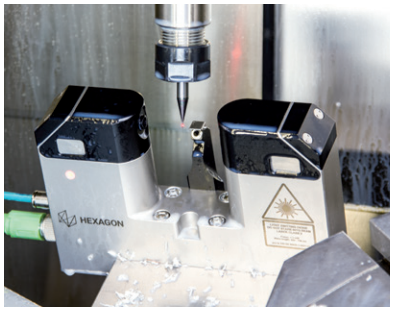

HEXAGON
MANUFACTURING INTELLIGENCE

Hexagon Manufacturing Intelligence helps industrial manufacturers develop the disruptive technologies of today and the life-changing products of tomorrow. As a leading metrology and manufacturing solution specialist, our expertise in sensing, thinking and acting – the collection, analysis and active use of measurement data – gives our customers the confidence to increase production speed and accelerate productivity while enhancing product quality.

Through a network of local service centres, production facilities and commercial operations across five continents, we are shaping smart change in manufacturing to build a world where quality drives productivity. For more information, visit **HexagonMI.com**.

Hexagon Manufacturing Intelligence is part of Hexagon (Nasdaq Stockholm: HEXA B; **hexagon.com**), a leading global provider of information technologies that drive quality and productivity across geospatial and industrial enterprise applications.

- COORDINATE MEASURING MACHINES
- 3D LASER SCANNING
- SENSORS
- PORTABLE MEASURING ARMS
- SERVICES
- LASER TRACKERS & STATIONS
- MULTISENSOR & OPTICAL SYSTEMS
- WHITE LIGHT SCANNERS
- METROLOGY SOFTWARE SOLUTIONS
- CAD / CAM
- STATISTICAL PROCESS CONTROL
- AUTOMATED APPLICATIONS
- MICROMETERS, CALIPERS AND GAUGES
- DESIGN AND COSTING SOFTWARE

m&h Inprocess Messtechnik GmbH
sales.mh@hexagon.com
www.mh-inprocess.com

m&h – Part of Hexagon Manufacturing Intelligence